Designed as a first section of multiple gear pumps group 33.

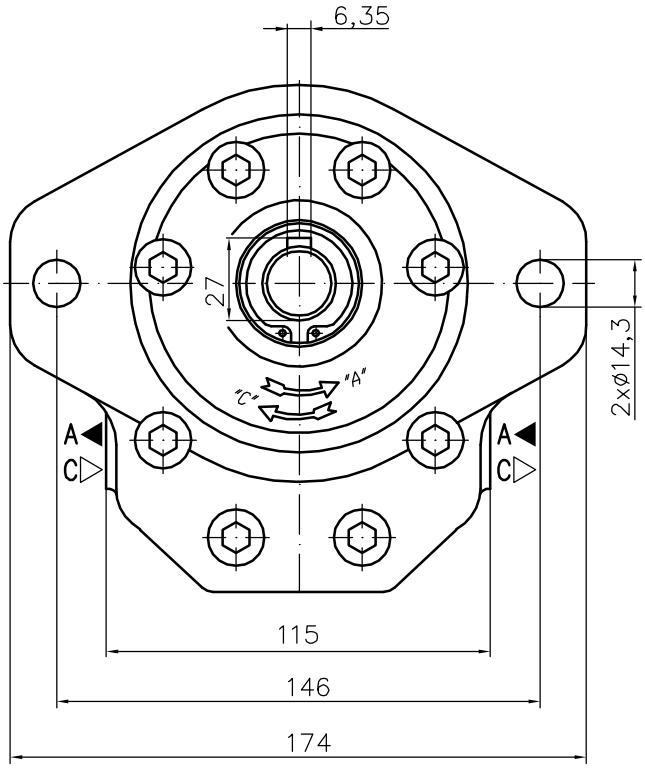

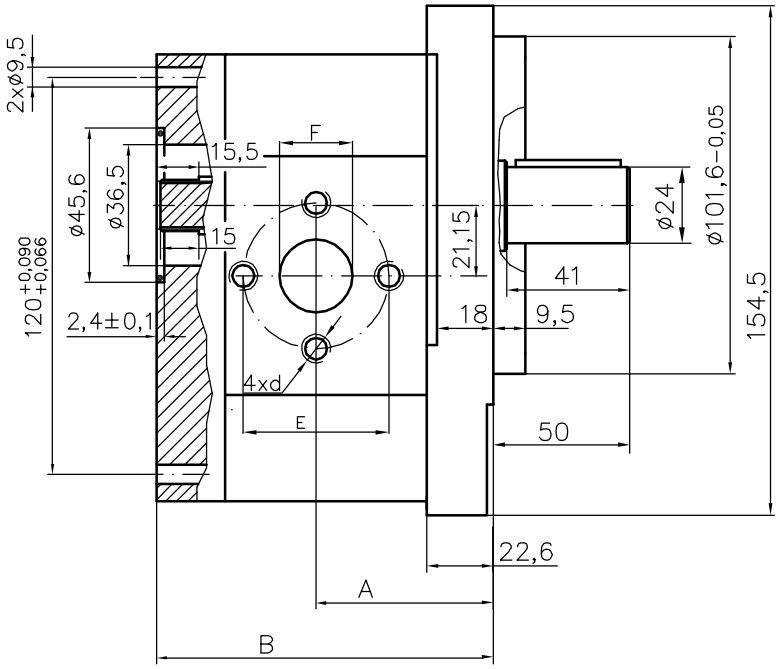

Type	Displacement	Flow		Pressure	max Speed	Dimension							
		at 1500 rpm	at max rpm	P_{nom}	n	A	B	Inlet			Outlet		
	cm^3/rev	l/min	l/min	bar	rpm	mm	mm	E	d	F	E	d	F
30A(C)25X407H	25	35,3	70,5	250	3000	58,3	119,1	40	M8	19	40	M8	19